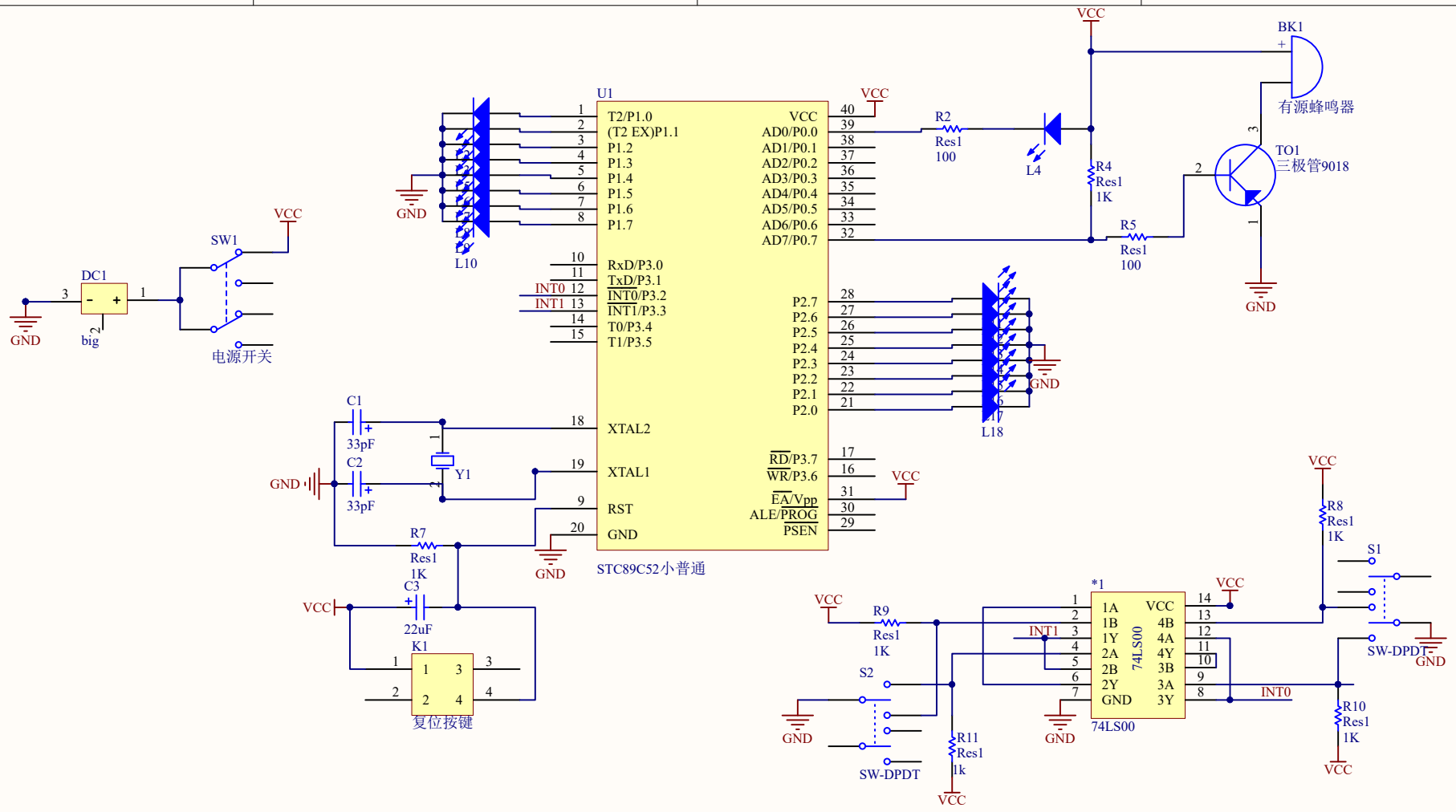

Title		
Size A4	Number	Revision
Date: 2019-12-5 星期四		Sheet of
File: F:\项目工程\作业\Sheet1.SchDoc		Drawn By: